HESAI

www.hesaitech.com

FTX_180

Fully Solid-State Short-Range Blind Spot Lidar User Manual

Classification: C0 (Public)

Doc version: F07-en-260520

Table of Contents

■ **About this manual** 1
Access to this manual 1
Technical support 1
Legends and format 1
■ **Safety notice** 2
Special warnings 2
Operating environment 3
Personnel 5
Installation and operation 5
Repair 9
1 Introduction 10
1.1 Operating principle 10
1.2 Basic structure 11
1.3 Field of View 13
1.4 Specifications 15
2 Setup 18
2.1 Mechanical installation 18
2.1.1 Exterior dimensions 18
2.2 Electrical interface 19
2.2.1 Pin description 19
2.2.2 Connector use 20
2.2.3 Cables (Ethernet) 22
2.3 Connection box (optional) 23
2.3.1 Ports 26
2.3.2 Connection 28

2.4 Network settings on the host computer 30
2.4.1 In Windows 31
2.4.2 In Ubuntu 34
2.5 Tools 37
3 Data structure 38
3.1 Point Cloud Data Packet 39
3.1.1 Ethernet Header 39
3.1.2 Point cloud UDP data 40
3.1.3 Ethernet tail 47
4 Maintenance 48
5 Troubleshooting 50
Appendix A: Performance distribution 52
A.1 Ranging capability 53
A.2 Resolution 55
Appendix B: Absolute time of point cloud data 56
B.1 Source of absolute time 56
B.1.1 PTP as the clock source 56
B.2 Absolute time of the Point Cloud Data Packets 57
Appendix C: Legal notice 58

About this manual

Please make sure to read through this user manual before your first use and follow the instructions herein when you operate the product. Failure to comply with the instructions may result in product damage, property loss, personal injuries, and/or a breach of warranty.

Access to this manual

To obtain the latest version, please do one of the following:

- Contact your sales representative of Hesai.
- Contact Hesai technical support at service@hesaitech.com.

Technical support

If your question is not addressed in this user manual, please contact us at:

- service@hesaitech.com
- https://www.hesaitech.com/technical-support/
- https://github.com/HesaiTechnology

Legends and format

Warnings: Instructions that must be followed to ensure safe and proper use of the product.

Notes: Additional information that may be helpful.

Names of data fields are in monospace font.

For example: `Distance` represents the Distance field.

Safety notice

- Please make sure to read through this safety notice and follow all the instructions and warnings. Failure to comply with the instructions and warnings may result in product damage, property loss, and/or personal injuries.
- Please check the certification information on the product's nameplate. If an agreement has been made not to present certification information on the nameplate, please follow the agreed-to arrangements.
- If you incorporate this lidar product into your product(s), you are required to provide this user manual (or access to this user manual) to the intended users of your product(s).
- This lidar product is intended as a component of an end product. The end-product supplier is responsible for assessing the risk of use in accordance with applicable standards and informing the intended user of safety-related information.
- Should there be other agreements with specific users, the other agreements shall apply.
- Before using a product, please confirm with Hesai the development maturity of the product in a timely manner. For products still in development, Hesai makes no warranty of non-infringement nor assumes any responsibility for quality assurance.

Special warnings

Laser safety

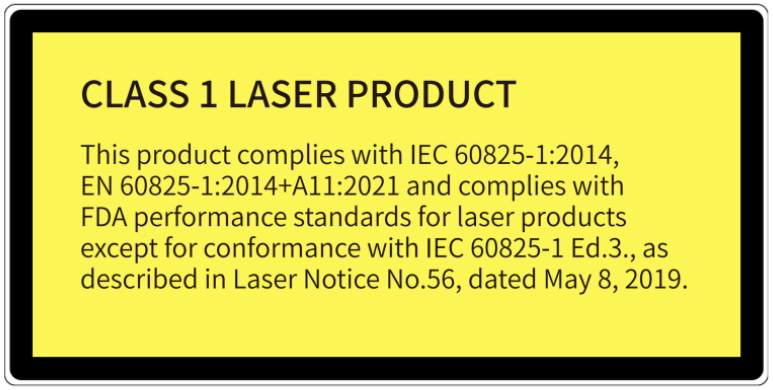

Hot surface

Hot parts!
Burned fingers when handling the parts.
Wait one-half hour after switching off before handling the parts.

Abnormalities

In any of the circumstances listed below, stop using the product immediately:

- If you suspect malfunctions of or damage to the product, with symptoms such as noticeable noise or vibration.
- If you or people in the nearby environment feel discomfort.
- If any device or equipment in the nearby environment malfunctions.

Meanwhile, contact Hesai or an authorized Hesai service provider for more information on product disposal.

Prohibition of disassembly

Unless expressly agreed to in writing by Hesai, do NOT disassemble the product.

Operating environment

Radio frequency (RF) interference

- Before using the product, make sure to read all the signs and notices on the product enclosure (including the nameplate). If specific users require not presenting certification information on the nameplate, please follow the agreed-to arrangements.
- Although the product is designed, tested, and manufactured to comply with the regulations on RF radiation (such as FCC, CE-EMC, or KCC), the radiation from the product may still influence electronic devices.

Vibration

- If significant mechanical shocks and vibration exist in the product's operating environment, please contact Hesai's technical support to obtain the shock and vibration limits of your product model. Exposure to over-the-limit shocks or vibration may damage the product.
- Make sure to package the product in shock-proof materials to avoid damage during transport.

Explosive atmosphere and other air conditions

- Do NOT use the product in any area where a potentially explosive atmosphere is present, such as where the air contains high concentrations of flammable chemicals, vapors, or particulates (including particles, dust, and metal powder).
- Do NOT expose the product to environments that have high concentrations of industrial chemicals, including liquefied gases that are easily vaporized (such as helium). Such exposure can damage or impair product functionality.

Chemical environment

Do NOT expose the product to corrosive or strong polar chemical environments (such as liquids or gases), including but not limited to strong acids, strong bases, esters, and ethers. This is to avoid damage to the product (including but not limited to water resistance failure).

Ingress protection (IP)

Please check the product's user manual for its IP rating (refer to Section 1.4 Specifications). Make sure to avoid any ingress beyond that rating.

Operating temperature

Please check the product's user manual for its operating temperature (refer to Section 1.4 Specifications). Make sure not to exceed the operating temperature range.

Recommended storage conditions

Please store the product in a dry and well-ventilated place. The recommended ambient temperature is 23 ± 5°C, with relative humidity between 30% and 70% RH.

Light interference

Certain precision optical instruments may interfere with the laser light emitted from the product. Please check all the instructions for these instruments and take preventive measures if necessary. For example, protective leather covers are provided for certain product models; when these lidars are temporarily not used for measurement, the leather covers can be applied to block laser light emission.

Personnel

Recommended operator qualifications

The product should be operated by professionals with an engineering background or experience in operating optical, electrical, and mechanical instruments. Always follow the instructions in this manual throughout operation. If needed, please contact Hesai for technical support.

Medical device interference

- Some components in the product can emit electromagnetic fields. If the product operators or people in the nearby environment wear medical devices (such as cochlear implants, implanted pacemakers, and defibrillators), make sure to consult the physicians and medical device manufacturers for medical advice, such as determining whether a safe distance from the product is required.
- If you suspect that the product is interfering with your medical device, stop using the product immediately.

Installation and operation

Power supply

- Before powering on the product, make sure the electrical interfaces are dry and clean. Do NOT power on the product in a humid environment.
- Do NOT use damaged or out-of-spec cables or adapters.
- You are recommended to use only the cables and power adapters provided by Hesai. If you are to design, configure, or select the power supply system (including cables) for the product, make sure to comply with the electrical specifications in the product's user manual (refer to Section 1.4 Specifications and the Power Supply Requirements section if available); for technical support, please contact Hesai.
- Please check Section 2.2 Electrical interface and strictly follow the instructions on plugging/unplugging the connector. If abnormalities already exist (such as bent pins, broken cables, and loose threads), stop using the product and contact Hesai technical support.

Eye safety

The product is a Class 1 laser product. It satisfies the requirements of:

- IEC 60825-1:2014
- EN 60825-1:2014+A11:2021
- 21 CFR 1040.10 and 1040.11 except for deviations (IEC 60825-1 Ed.3) pursuant to Laser Notice No.56, dated May 8, 2019.

CAUTION: Use of controls or adjustments or performance of procedures other than those specified herein may result in hazardous radiation exposure.

CAUTION

- For maximum self-protection, it is strongly warned that users do NOT look into the transmitting laser through a magnifying product (microscope, eye loupe, magnifying glass, etc.).
- This product does not have a power switch. It starts operating once connected to power. During operation, the entire lenses can be regarded as the product's laser emitting window; looking at the lenses can be regarded as looking into transmitting laser.

FCC Compliance

This device complies with part 15 of the FCC Rules. Operation is subject to the following two conditions: (1) This device may not cause harmful interference, and (2) this device must accept any interference received, including interference that may cause undesired operation.

Product enclosure

- Do NOT crush or puncture the product. If the product enclosure is broken, stop using it immediately and contact Hesai technical support.
- Certain product models contain high-speed rotating parts. To avoid potential injuries, do NOT operate the product if the enclosure is loose.
- If the product enclosure consists of fins or grooves, please wear gloves when handling the product. Applying too much pressure with your bare hands may cause cuts, bruises or other injuries.

Drops and burns

The product contains metal, glass, and plastic, as well as sensitive electronic components. If the product is dropped or burnt, stop using it immediately and contact Hesai technical support.

Lenses

The location of the lenses is illustrated in Section 1 Introduction.

- Do NOT apply protective film, wax or any other substance on the lenses.
- To keep the product's lenses from fingerprints and other stains, do NOT touch the lenses with bare hands. If the lenses are already stained, please refer to the cleaning method in Section 4 Maintenance.
- To prevent scratches, do NOT touch the product's lenses with hard or sharp objects. If scratches already exist, stop using the product and contact Hesai technical support. Severe scratches may affect the quality of the product's point cloud data.

Mounting

- Before operating the product, make sure it is properly and securely mounted. The mounting should prevent the product from leaving its mounting position under external forces (such as collisions, high winds, and stone impacts).
- If the product is installed in a cavity designed as a wet zone, make sure that no water accumulates in the cavity.
- Before installing any exterior part, please ensure that each exterior part and its movable area do not overlap the Field of View (FOV) of the lidar.

The lidar's FOV is the spatial angular range bounded by the horizontal and vertical FOV ranges (see Section 1.4 Specifications); the distance to the origin of the lidar's coordinate system is not limited. For inquiries about the FOV, please contact Hesai technical support.

Hot surface

During operation or the time period after the operation, the product's enclosure can be hot.

- To prevent discomfort or even burns, do NOT touch the product's enclosure with your skin.
- To prevent fires, make sure to keep flammable materials away from the product's enclosure.

Certain product models support active heating of the lenses to reduce the impact of ice and frost.

- While active heating is ON, the lenses can be hot. To prevent discomfort or even burns, avoid direct skin contact with the lenses.
- When the lenses is free of ice and frost, you may turn off active heating.

Peripherals

The product may be used along with accessories and devices, such as suction cup mounts, extension cables, power supplies, network devices, GNSS/PTP devices, CAN transceivers, and cleaning equipment.

When selecting a peripheral, please refer to all relevant specifications in the product's user manual or contact Hesai technical support. Using out-of-spec or unsuitable devices may result in product damage or even personal injuries.

Firmware and software upgrading

Make sure to use only the upgrade files provided by Hesai. Make sure to observe all the instructions provided for that upgrade file.

Customized firmware and software

- Before using a customized version of firmware and software, please fully understand the differences in functions and performance between the customized version and the standard version.
- Make sure to strictly follow all the instructions and safety precautions provided for that customized version. If the product does not function as anticipated, stop using the product immediately and contact Hesai technical support.

Point cloud data processing

- Certain product models support one or more point cloud data processing functions, including but not limited to: Noise Filtering, Interstitial Points Filtering, Retro Multi-Reflection Filtering, and Nonlinear Reflectivity Mapping.
- These functions are configurable and are intended only to assist the user in extracting information from the point cloud data. Users are in full control of whether to use any of these functions. Moreover, users are responsible for analyzing the product's intended application scenarios and evaluating the risk of enabling one or more of these functions in combination.
- To learn about the supported functions of a product model, please contact Hesai technical support.

Repair

- Unless expressly agreed to in writing by Hesai, do NOT disassemble, repair, modify, or alter the product by yourself or through any third party. Such a breach:
  - can result in product damage (including but not limited to water resistance failure), property loss, and/or injuries;
  - shall constitute a breach of warranty.
- For more product repair issues, please contact Hesai or an authorized Hesai service provider.

1 Introduction

1.1 Operating principle

Distance measurement: Time of Flight (ToF)

1. A laser diode emits a beam of ultrashort laser pulses onto the target object.
2. The laser pulses are reflected after hitting the target object. The returning beam is detected by an optical sensor.
3. Distance to the object can be accurately measured by calculating the time between laser emission and receipt.

$d = \frac{ct}{2}$	d: Distance c: Speed of light t: Travel time of the laser beam

1.2 Basic structure

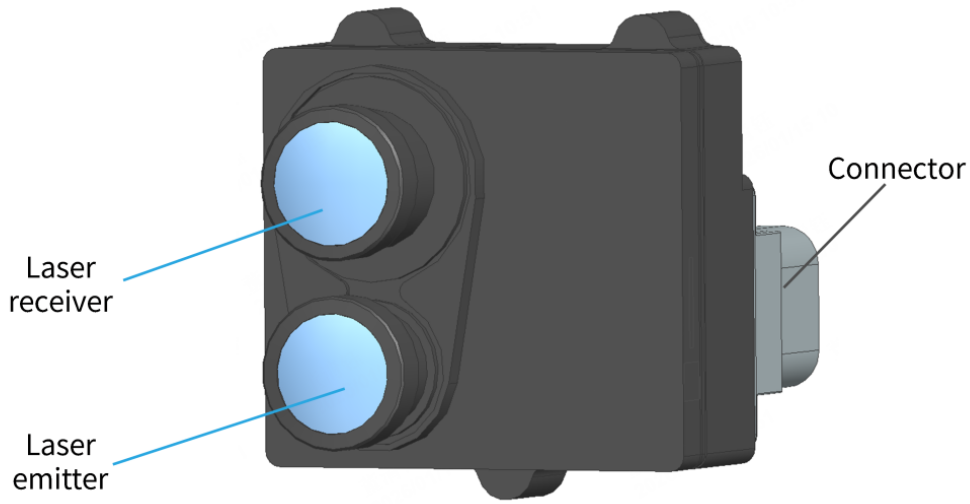

Figure 1. Axonometric view

The lidar structure is shown in Figure 1.

The lidar's coordinate system is illustrated in Figure 3 and Figure 2.
All measurements are relative to the origin (Point O, which is also the optical center).

The azimuth of the current firing channel is defined in Figure 2. Y-axis corresponds to 0°.

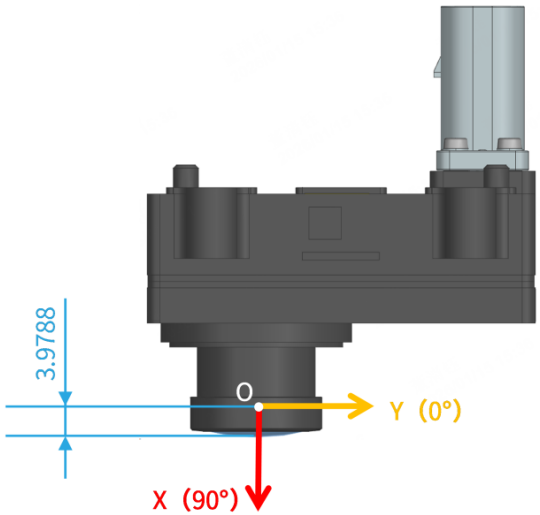

Figure 2. Top view (unit: mm)

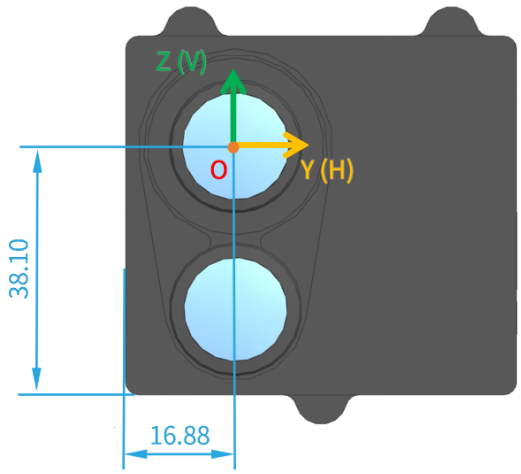

Figure 3. Front view (unit: mm)

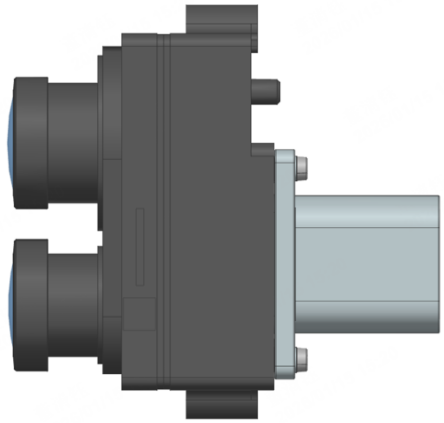

Figure 4. Right side view

1.3 Field of View

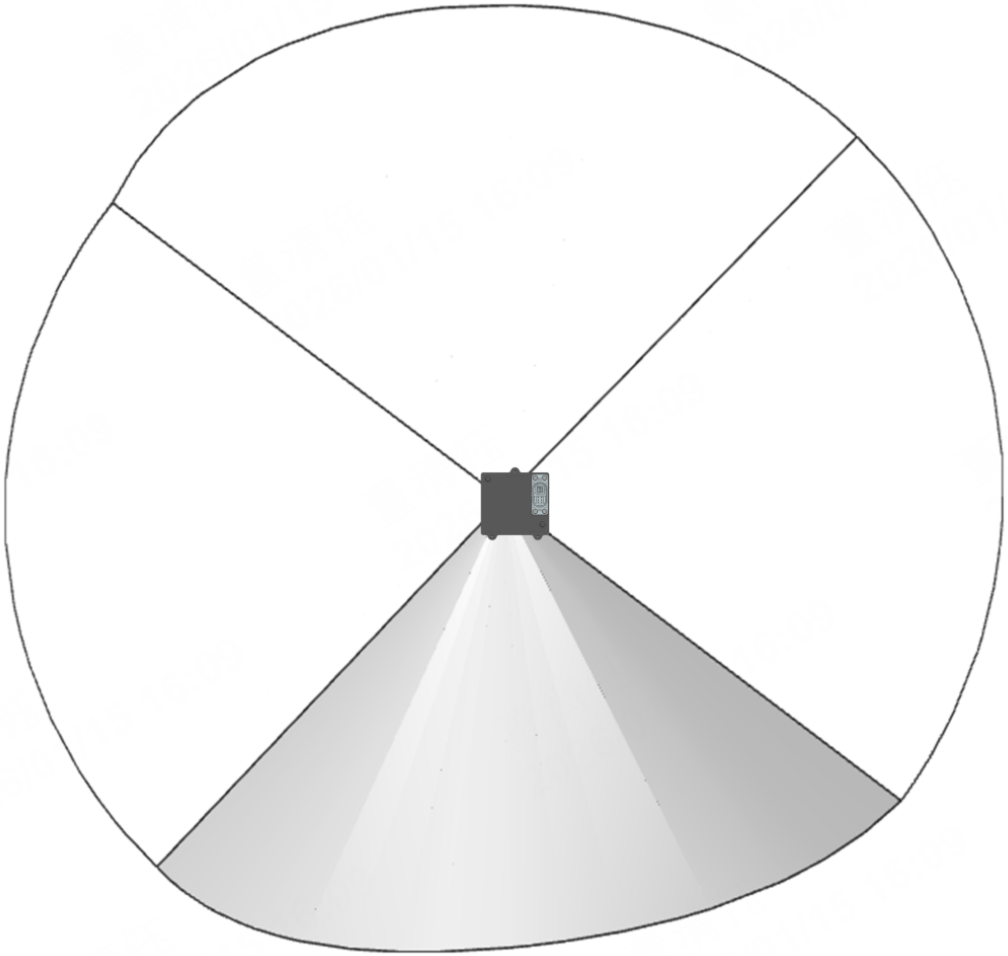

Figure 5. Illustration of the FOV

The spherical and planar projections of the actual FOV are shown in Figure 6, Figure 7 and Figure 8.

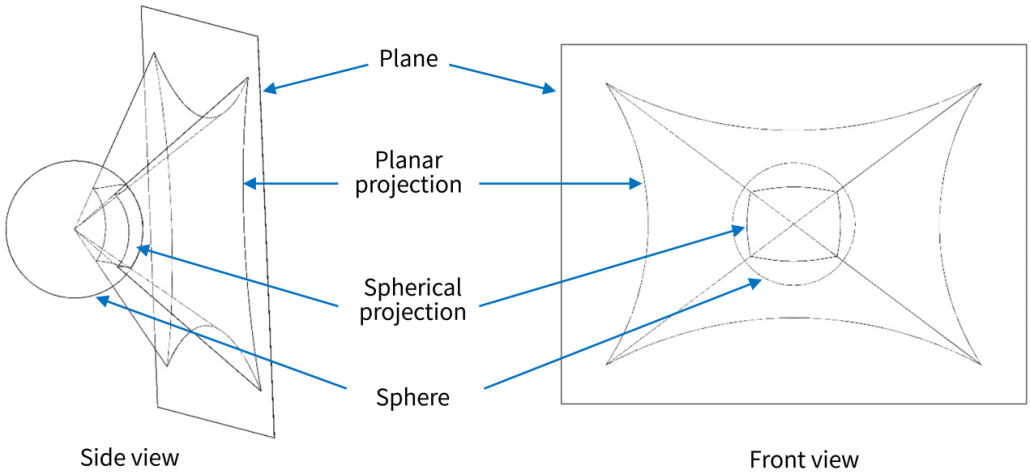

Figure 6. Spherical and planar projections of the actual FOV

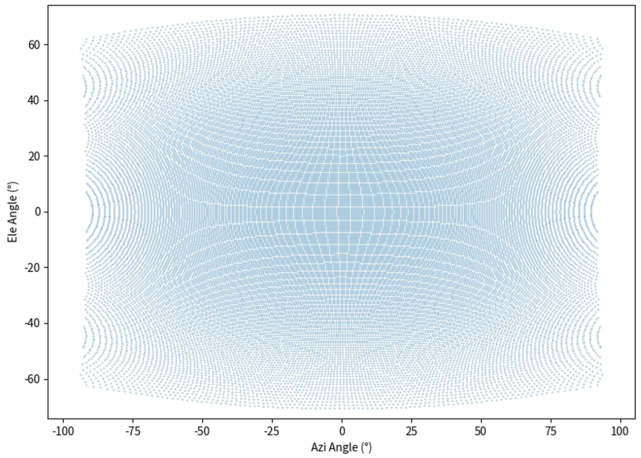

Figure 7. FOV projection on the angular plane of the spherical coordinate system

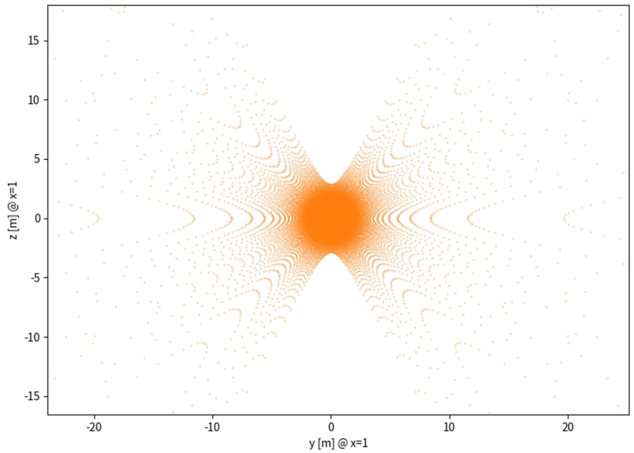

Figure 8. FOV projection on the angular plane of the Cartesian coordinate system

1.4 Specifications

SENSOR

Scanning method	Electronic scanning (fully solid-state)
Valid channels	Approx. 41 000
Ranging capability ①	20 m (at 10% reflectivity)
FOV (H × V)	180° × 140°
Resolution (H × V, central FOV)	0.62° × 0.62°
Frame rate	10 Hz
Return mode	**Single Return:** First

MECHANICAL/ELECTRICAL/OPERATIONAL

Wavelength	940 nm
Laser class	Class 1 Eye Safe
Ingress protection	IP6K9K
Dimensions ②	60 × 38.7 × 55 (WDH, mm)
Rated voltage range	DC 9 to 16 V
Power consumption ③	< 6 W
Operating temperature ④	-40°C to 85°C
Storage temperature ④	-40°C to 95°C
Weight ②	180 g

DATA I/O

Data transmission	Automotive Ethernet 100BASE-T1, slave mode
Measurements	Distance and reflectivity
Valid point rate ⑤	**Single Return:** Approx. 492 000 points/sec
Point cloud data rate ⑥	**Single Return:** Approx. 22.7 Mbps
Clock source	PTP (802.1AS AUTOSAR)
PTP clock accuracy	⩽1 µs
PTP clock drift	⩽5 µs/s

Specifications are subject to change. Please refer to the latest version of this manual.

Notes to specifications

① Ranging capability	• For the central sub-FOV of central-enhanced distribution. • For the ranging capability of central-enhanced and uniform-emission distribution, see Section A.1 Ranging capability. • Test conditions: normal incidence, 100 klx ambient illuminance, probability of detection (PoD) > 50%, and false alarm rate (FAR) < 1E-4.
② Dimensions and weight	• The height and depth do not include the connector. • May be different for customized models. The mechanical drawings and data exclusively provided for customized models shall prevail.
③ Power consumption	• Typical value, not including accessories such as the connection box. • The external power supply should be able to provide at least 15 W.
④ Operating temperature and storage temperature	Both refer to ambient air temperature. • During operation, the lidar's surface and internal temperatures may exceed the ambient air temperature.

	• To obtain the real-time temperatures of the lidar's internal modules, refer to Get Lidar Status (0x09) in the TCP API Reference Manual.
⑤ Valid point rate	For the entire FOV, not the central sub-FOV.
⑥ Point cloud data rate	• For the entire FOV, not the central sub-FOV. • Given: frame rate (10 Hz), size of a Point Cloud Data Packet (554 bytes) • In single return mode, each frame corresponds to 512 Point Cloud Data Packets (see Section 3.1.2.3 Header). • Ten frames per second. • Therefore, 5120 packets are transmitted per second, totaling 5120 × 554 bytes. • With unit conversion, point cloud average data rate = 5120 × 554 × 8 × 1E-6 ≈ 22.7 Mbps.

2 Setup

2.1 Mechanical installation

2.1.1 Exterior dimensions

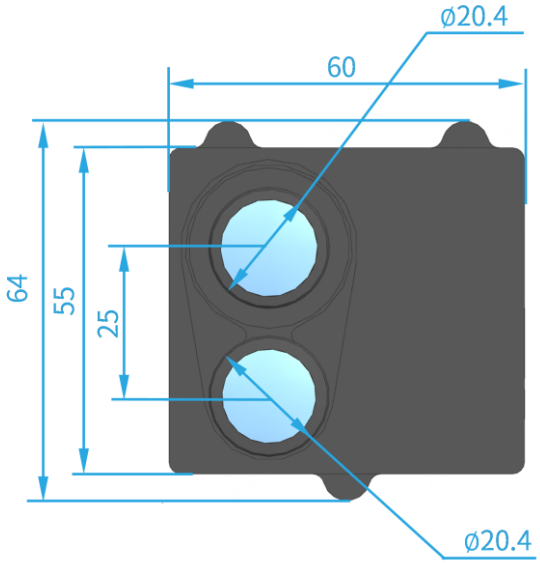

Figure 9. Front view (unit: mm)

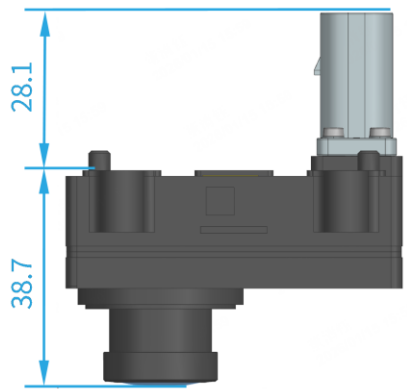

Figure 10. Top view (unit: mm)

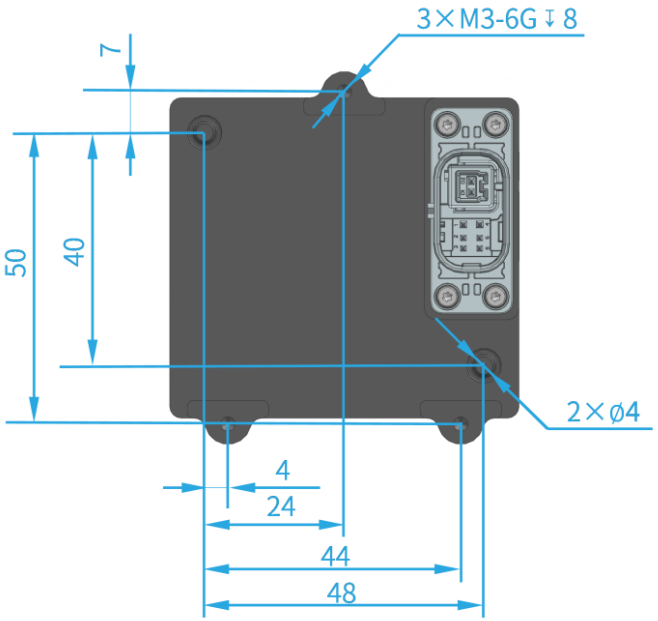

Figure 11. Back view (unit: mm)

2.2 Electrical interface

TE Connectivity Part Number: 2446023-1 (male socket, on the lidar)

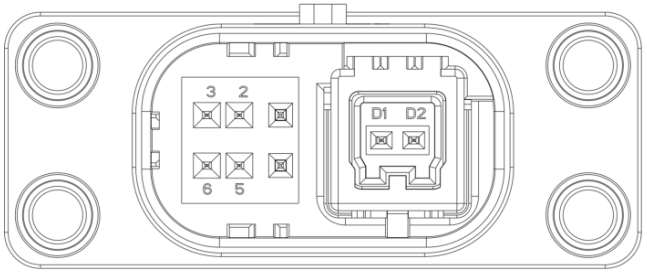

Figure 12. Connector (male socket)

2.2.1 Pin description

Pin description

No.	Signal	Voltage	No.	Signal	Voltage
1	VCC	9 to 16 V	5	Reserved	-
2	Reserved	-	6	Reserved	-
3	Reserved	-	D2	MDI-P	-
4	GND	0 V	D1	MDI-N	-

Do NOT touch the reserved pins with bare hands.

2.2.2 Connector use

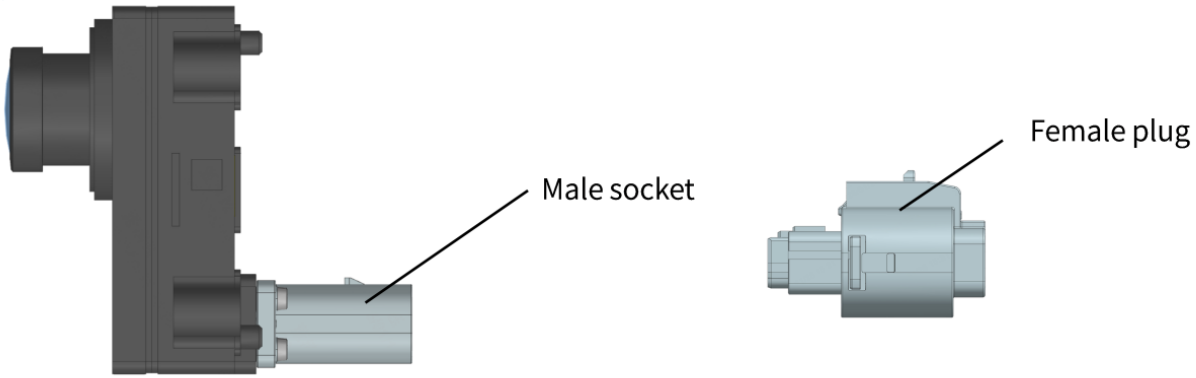

Figure 13. Connector

- Before connection, check the pins on the socket and the holes on the plug. In case of bent pins or damaged holes, stop using the connector and contact technical support.
- To prevent breakdowns, turn off the power source before connection and disconnection.
- Do NOT attempt to force open a connection by pulling on the cables or by twisting the connectors in any way. Doing so can loosen the connectors' shells, or even damage the contacts.
- If the connector's shell is accidentally pulled off, stop using the connector and contact Hesai technical support. Do NOT attempt to assemble the connector's shell and cable collet; do NOT connect a connector without its shell. Doing so may damage the lidar's circuits.
- For further troubleshooting, please contact Hesai technical support or obtain work instructions from the connector manufacturer.
- The connector is designed to withstand at least **10** mating cycles; exceeding this number may increase the risk of connector damage.

Connection	1. Turn off the power source. 2. Make sure the plug's red CPA is on the same side as the socket's locking nose. 3. Push the plug straight into the socket until you feel and hear a click. 4. Push the red CPA towards the socket until you feel and hear a click.
Disconnection	1. Turn off the power source. 2. Pull the red CPA away from the socket until you feel and hear a click. 3. Depress the black locking latch; then pull the plug from the socket.

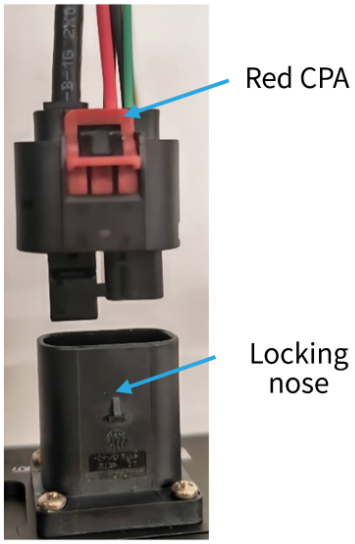

Figure 14. Connector connection

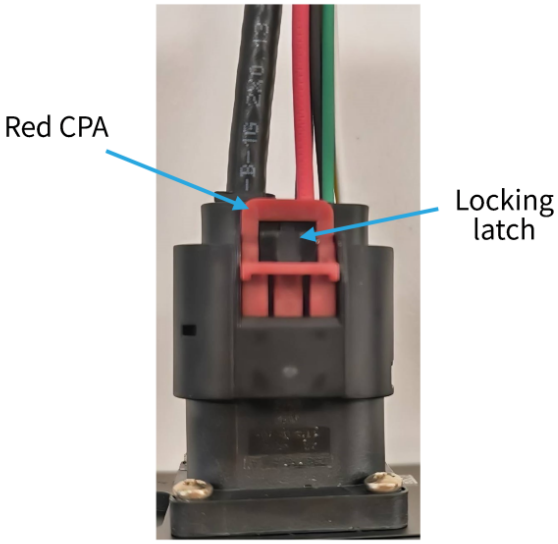

Figure 15. Connector disconnection

2.2.3 Cables (Ethernet)

Outer diameter (OD) = 4.10 ± 0.20 mm

Minimum bend radius:

- Single: 5 × OD
- Multiple: 15 × OD

2.3 Connection box (optional)

Users may connect the lidar with or without a connection box.

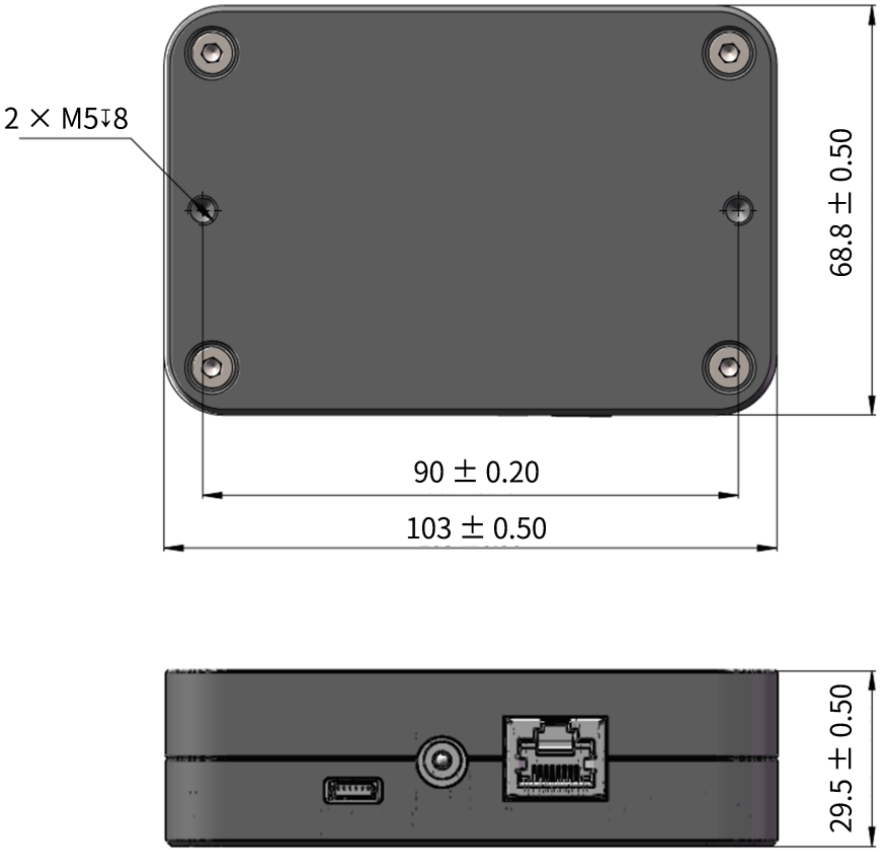

Figure 16. Connection box (unit: mm)

An additional cable is used for connecting the lidar (on the left) and the connection box (on the right), as shown below.

One cable's head cannot connect to another cable's tail, so each lidar can only use one cable.

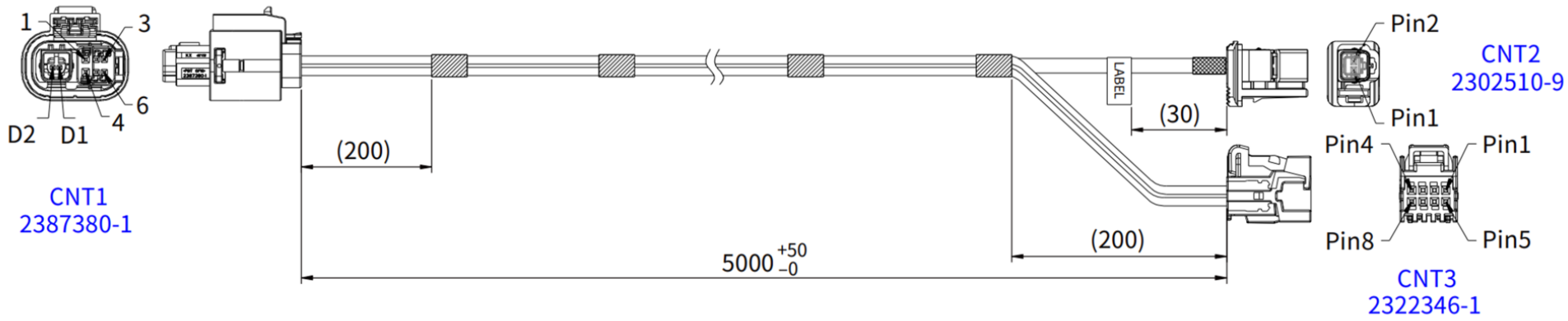

Figure 17. Cable between lidar and connection box (unit: mm)

The wire colors and cross-sectional areas are shown below:

Pin number on CNT1	Pin number on CNT3	Signal	Wire color	Wire cross section
1	4	VCC	Red	0.75 mm^2
2	5	Reserved	Green	0.35 mm^2
3	2	Reserved	White	0.35 mm^2
4	8	GND	Black	0.75 mm^2
5	7	Reserved	Black	0.35 mm^2
6	6	Reserved	Yellow	0.35 mm^2
Pin number on CNT1	Pin number on CNT2	Signal	Wire color	Wire cross section
D2	1	MDI-P	White	-
D1	2	MDI-N	Green	-

2.3.1 Ports

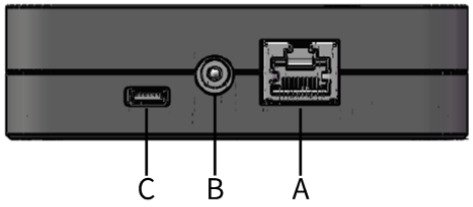

Figure 18. Connection box (front)

Port number	Port name	Description
A	Standard Ethernet port	RJ45, 100 Mbps Ethernet
B	Power port	Device-side connector: DC power jack • Manufacturer: Same Sky Devices • Part Number: PJ-057AH • Reference drawing: https://www.sameskydevices.com/product/resource/pj-057a.pdf Cable-side mating connector: DC barrel plug (DC-005 or equivalent) • Outer diameter: 5.5 mm • Inner diameter: 2.1 mm • Insertion depth: 9.45 mm • Polarity: center positive
C	Reserved port	Do NOT connect this port to external signals.

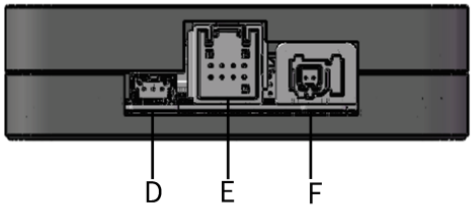

Figure 19. Connection box (back)

Port number	Port name	Description
D	Reserved port	Do NOT connect this port to external signals.
E	Power output port	See CNT3 in Figure 17; Part Number: 2311621-1
F	Automotive Ethernet port	See CNT2 in Figure 17; Part Number: 2304372-1

2.3.2 Connection

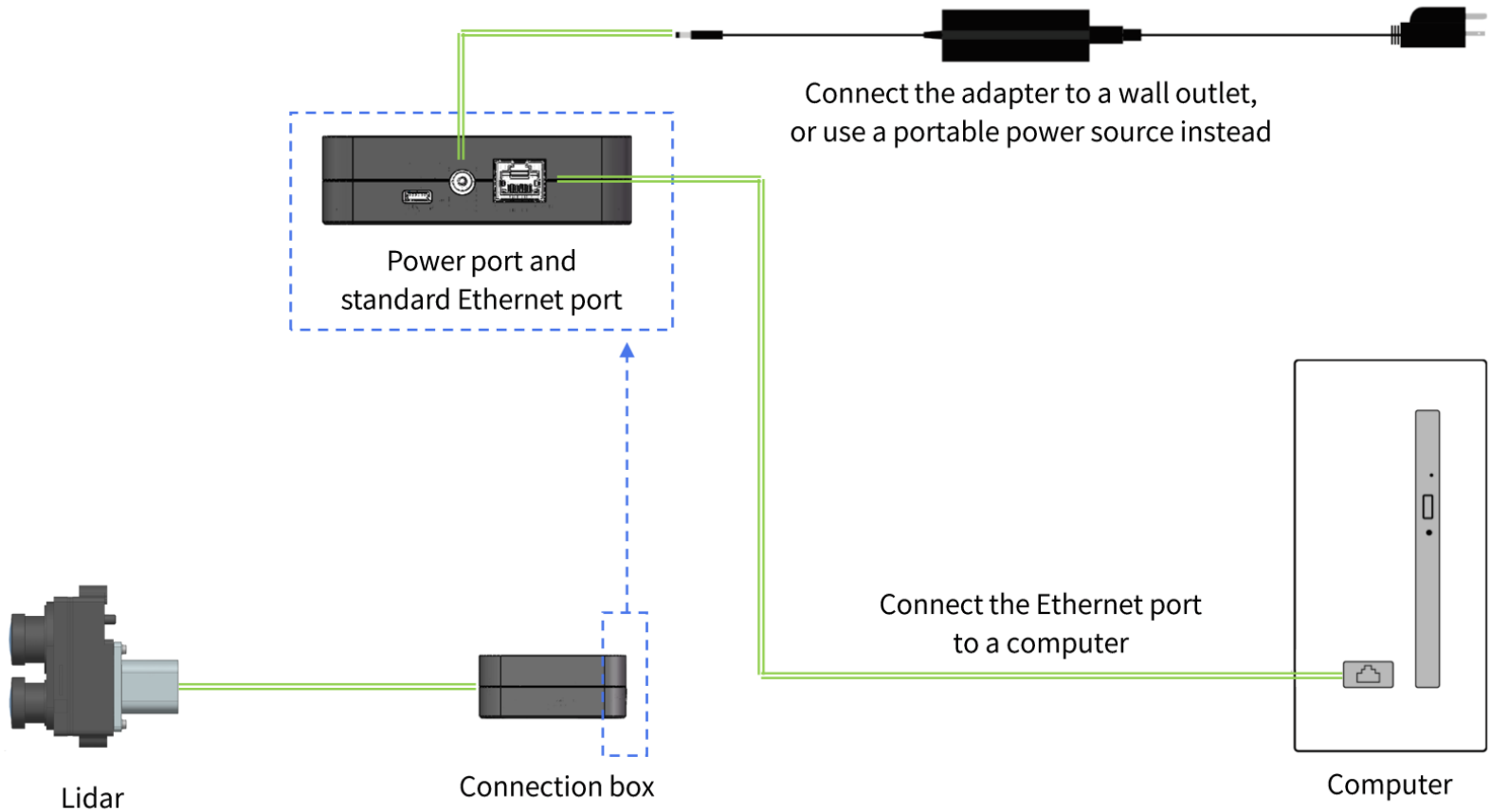

Figure 20. Connection with PTP (software simulation)

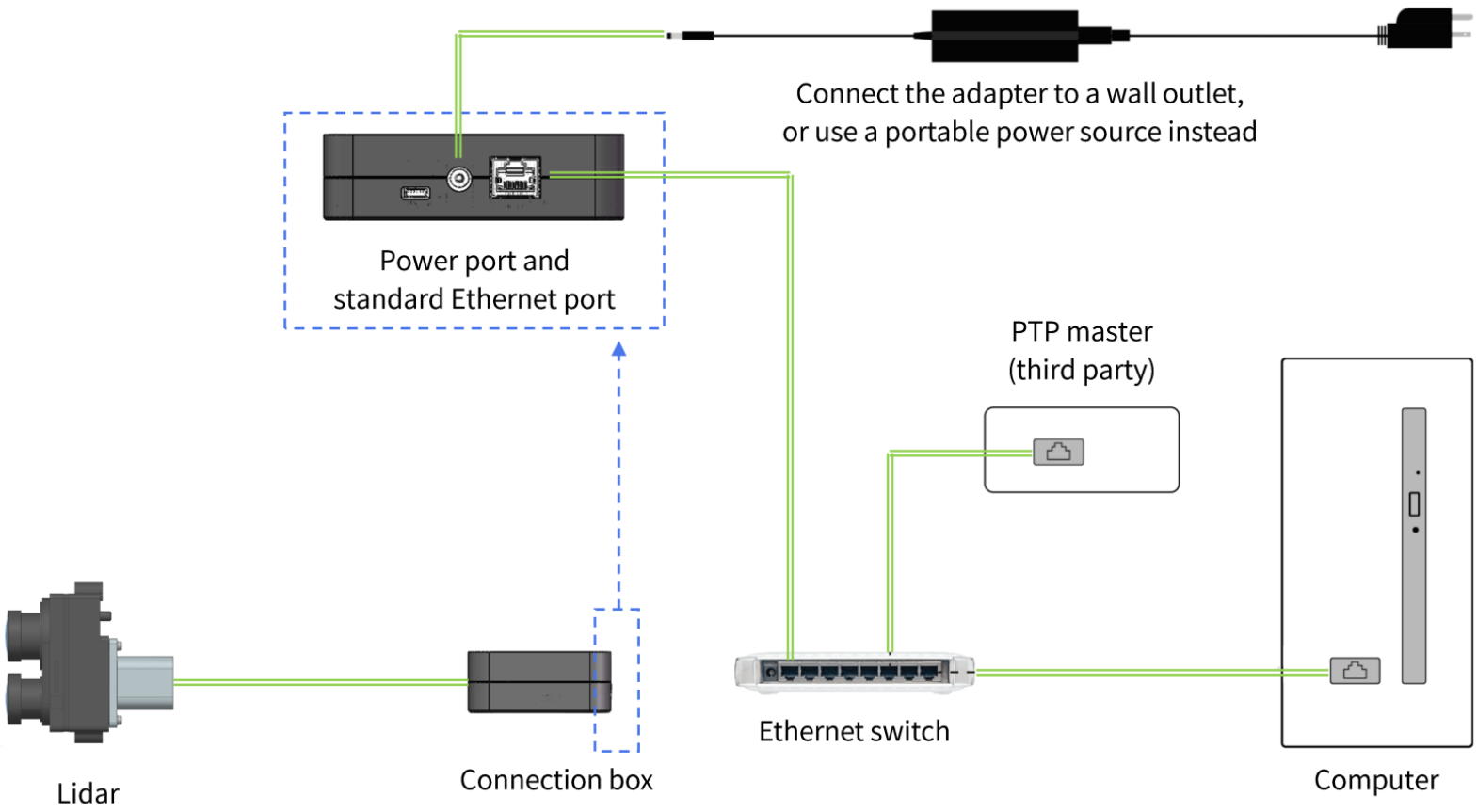

Figure 21. Connection with PTP (hardware device)

2.4 Network settings on the host computer

The lidar has no power switch. It starts transmitting data when both of these conditions are met:

- The lidar is connected to power.
- The lidar is connected to a host computer via Ethernet.

To analyze point cloud data, configure the network parameters of the host computer:

Network parameters	Value	Description
IP address	192.168.1.**X**	**X** can be selected from 2 to 200 and from 202 to 254.
Subnet mask	255.255.255.0	-
VLAN ID	Range: 1 to 4094	Required only when VLAN tagging is used. Make sure the host computer and the lidar use the same VLAN ID.

2.4.1 In Windows

1. [**Control Panel**] > [**Network and Internet**] > [**Network and Sharing Center**] > [**Change adapter settings**].
2. Right-click [**Ethernet**] or [**Ethernet X**] which shows Ethernet connection (with no red cross at the bottom left of the icon) > Select [**Properties**].

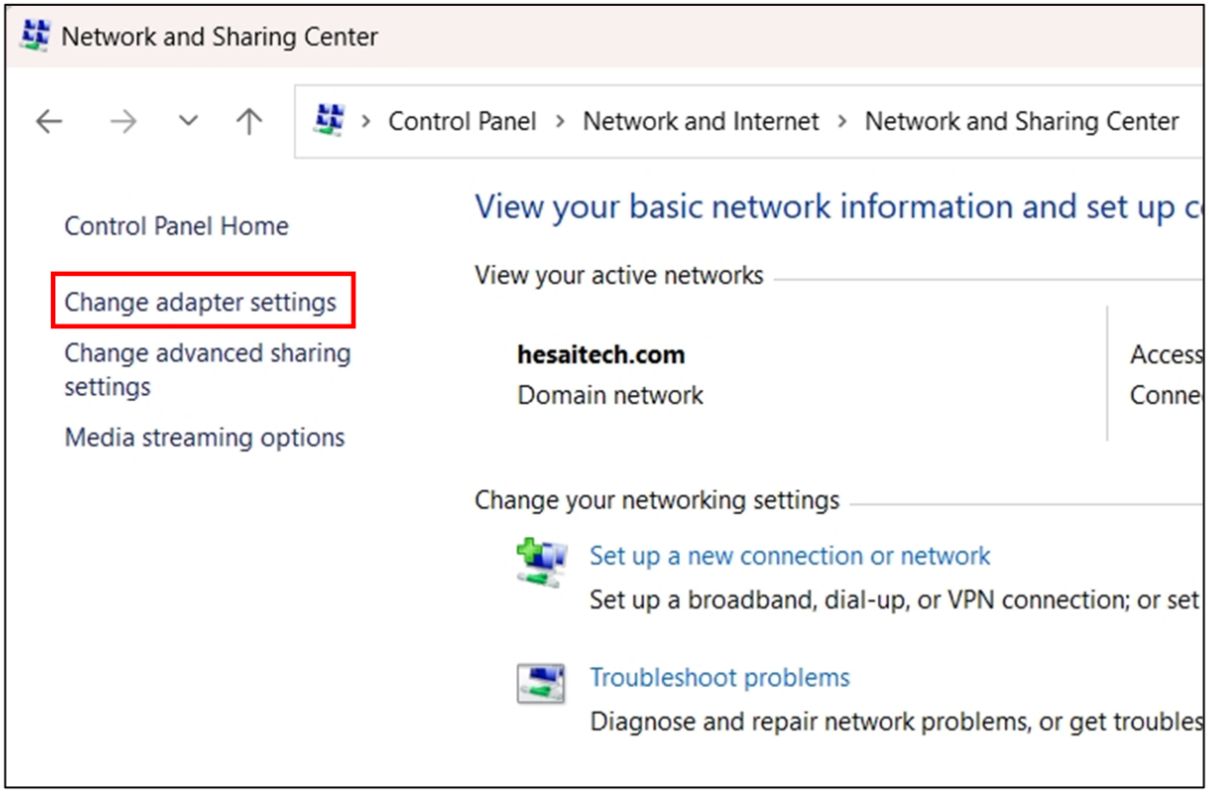

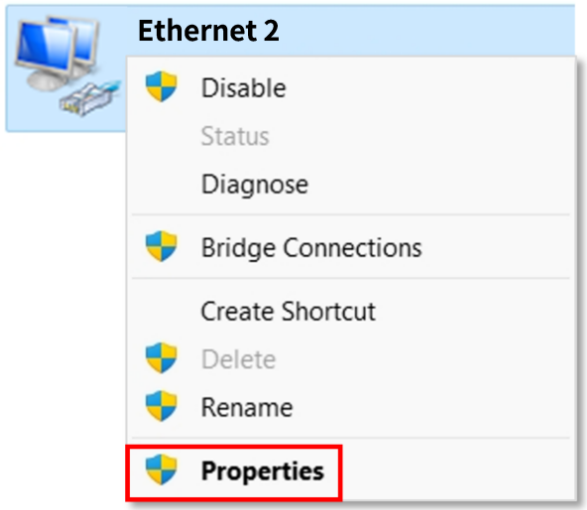

3. Double-click [**Internet Protocol Version 4 (TCP/IPv4)**].
4. Select [**Use the following IP addresses**] > Input the host computers's IP address and subnet mask.

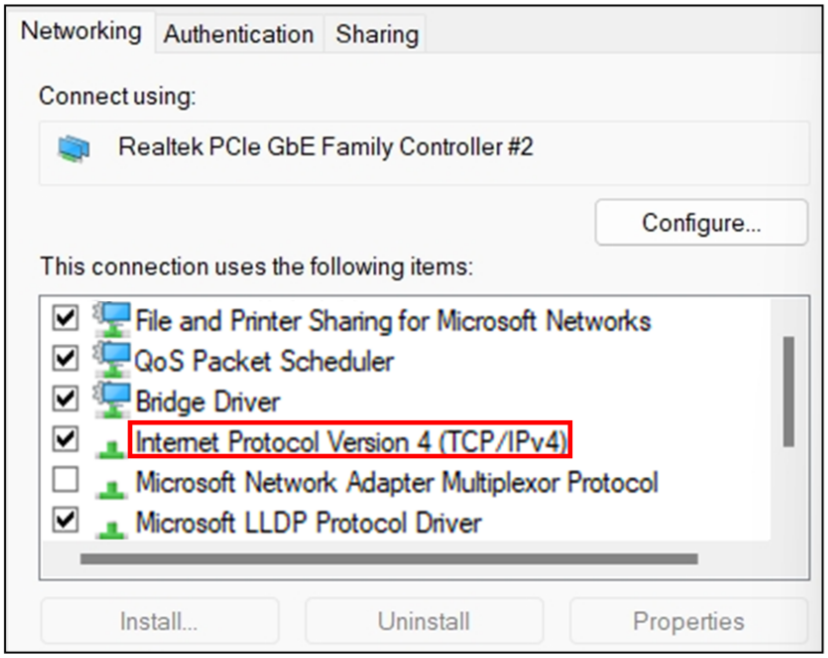

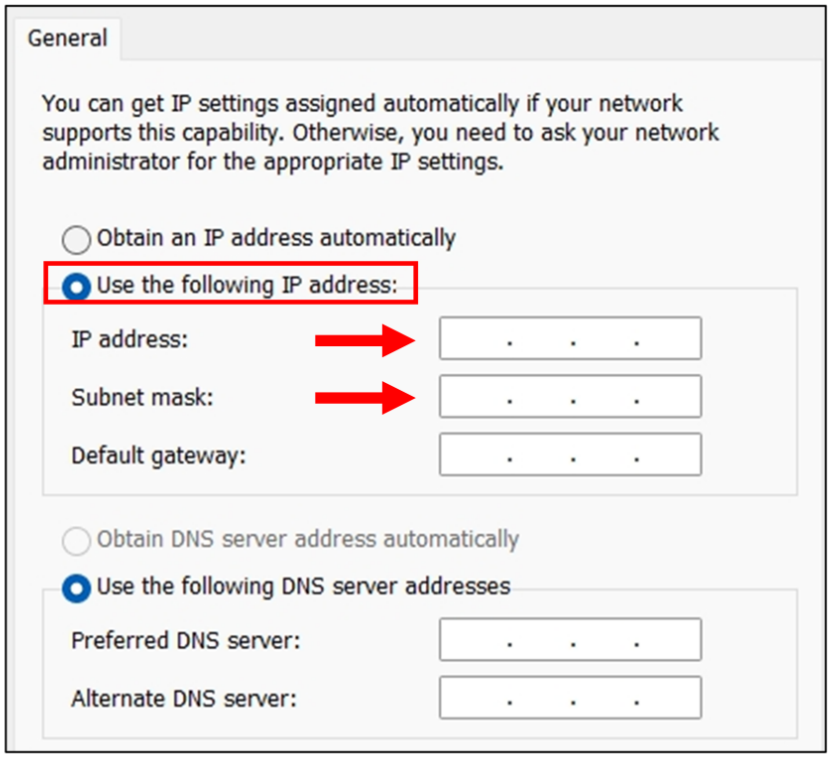

Ping command can be used to check the connection:

1. Press Win + R to open the Run dialog box.
2. Enter "cmd" and click [**OK**] to open the Command Prompt.
3. Enter "ping 192.168.1.201" and check the output.

5. To enable VLAN tagging:
   Click [**Configure**] > Under the [**Advanced**] tag, select [**VLAN ID**] from the [**Property**] list > Input a VLAN ID in the [**Value**] box > Click [**OK**].

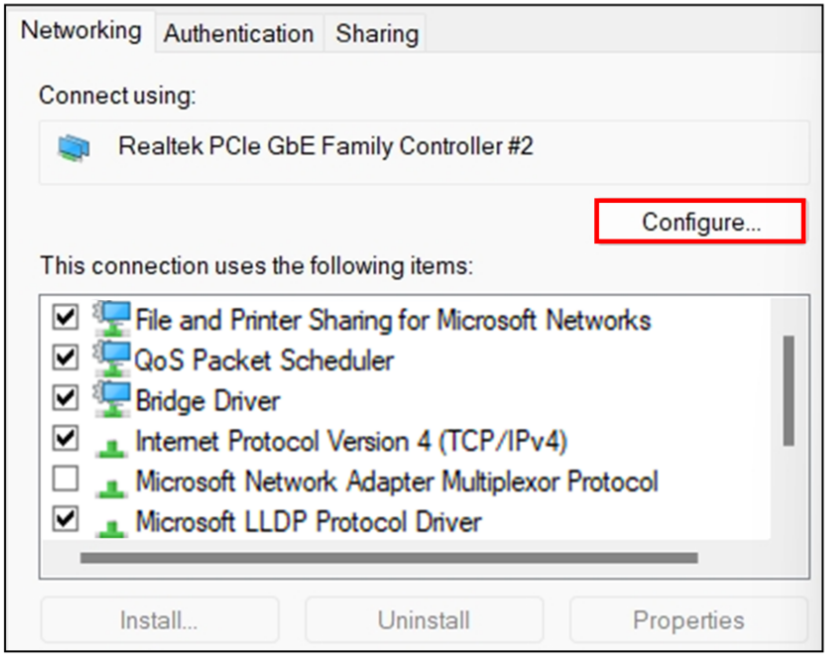

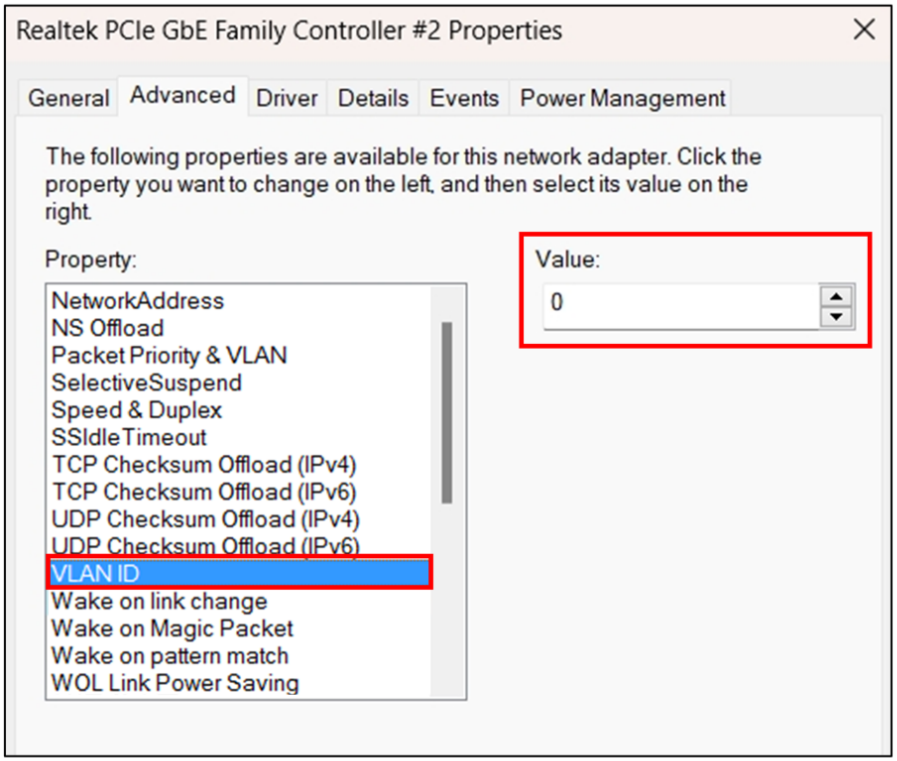

If the [**Property**] list has no [**VLAN ID**], it is recommended to update the network adapter driver.

2.4.2 In Ubuntu

1. Find the host computer's network interface name.

   Method 1

   a. Open **Settings — Network**.
   b. Look for the interface whose status is "Connected".
   The name in parentheses after "Ethernet" is the network interface name.

   Method 2

   a. Open a terminal and run this command:

```
ifconfig
```

   b. Look for the interface with non-zero RX packets and bytes.
   (In the example below, **enp5s0** shows non-zero Rx packets and bytes, indicating active data transmission.)

```
❯ ifconfig
docker0: flags=4099<UP,BROADCAST,MULTICAST>  mtu 1500
        inet [redacted] netmask [redacted] broadcast [redacted]
        ether [redacted] txqueuelen 0  (Ethernet)
        RX packets 0  bytes 0 (0.0 B)
        RX errors 0  dropped 0  overruns 0  frame 0
        TX packets 0  bytes 0 (0.0 B)
        TX errors 0  dropped 0 overruns 0  carrier 0  collisions 0

enp2s0f0: flags=4099<UP,BROADCAST,MULTICAST>  mtu 1500
        ether [redacted] txqueuelen 1000  (Ethernet)
        RX packets 0  bytes 0 (0.0 B)
        RX errors 0  dropped 0  overruns 0  frame 0
        TX packets 0  bytes 0 (0.0 B)
        TX errors 0  dropped 0 overruns 0  carrier 0  collisions 0

enp5s0: flags=4099<UP,BROADCAST,MULTICAST>  mtu 1500
        ether [redacted] txqueuelen 1000  (Ethernet)
        RX packets 267706980  bytes 300970909734 (300.9 GB)
        RX errors 0  dropped 0  overruns 0  frame 0
        TX packets 3184  bytes 590575 (590.5 KB)
        TX errors 0  dropped 0 overruns 0  carrier 0  collisions 0
```

When not using VLAN

2. Run this command in the terminal:

```
sudo ifconfig ${interface_name} ${ip_addr}
```

   - Replace `${interface_name}` with the host computer's network interface name.
   - Replace `${ip_addr}` with the host computer's IP address.

When using VLAN

2. Run this command in the terminal:

```
sudo ip link add link ${interface_name} name ${interface_name}.${vlan_id} type vlan id ${vlan_id}
sudo ip link set up ${interface_name}.${vlan_id}
sudo ip addr add ${ip_addr}/24 dev ${interface_name}.${vlan_id}
ip addr show ${interface_name}.${vlan_id}
```

- Replace `${interface_name}` with the host computer's network interface name.
- Replace `${vlan_id}` with the host computer's VLAN ID.
- Replace `${ip_addr}` with the host computer's IP address.

2.5 Tools

- The following tools are supported by most models. Contact Hesai technical support to confirm applicability.
- For a customized model or an early prototype, contact Hesai technical support to confirm applicability.

Tool	Purpose	Where to find it
PandarView 2 (point cloud visualization software)	To record and display point cloud data.	Public versions (for selected models only): https://www.hesaitech.com/downloads/
LidarUtilities (software for host computers)	To set parameters, check device info and status, or upgrade firmware and software.	Contact Hesai technical support for details.
API		Contact Hesai technical support to confirm the applicable API type for this model (HTTP, PTC, or serial communication API) and obtain the corresponding technical documentation.
Software development kits (SDKs) and ROS drivers	To assist development.	Public versions (for selected models only): https://github.com/HesaiTechnology
Web control	To set parameters, check device info and status, or upgrade firmware and software.	If this model supports web control, see the "Web Control" section of this manual.

3 Data structure

Unless otherwise specified, all the multi-byte fields are unsigned values transmitted in little-endian format.

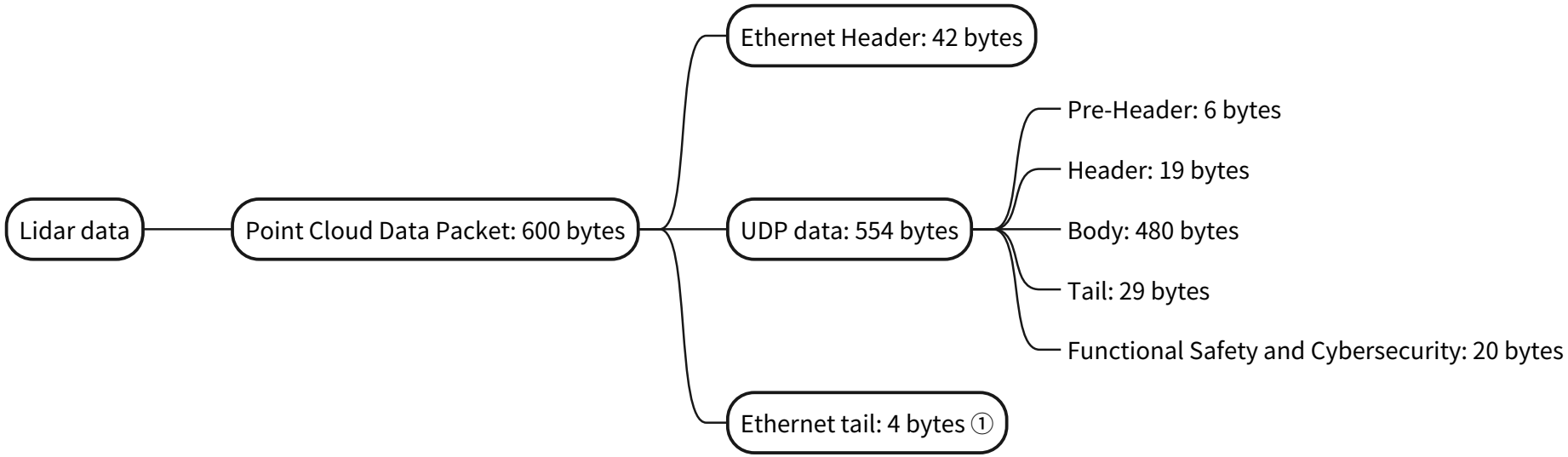

① Network monitoring software (such as WireShark) usually does not display the **Ethernet tail** (4 bytes).

Figure 22. Data structure

3.1 Point Cloud Data Packet

Before receiving Point Cloud Data Packets, please perform Network settings on the host computer.

3.1.1 Ethernet Header

Point Cloud Data Packet: Ethernet Header

Field	Byte(s)	Description
Ethernet II MAC	12	Destination MAC: xx:xx:xx:xx:xx:xx (FF:FF:FF:FF:FF:FF for broadcast) Source MAC: xx:xx:xx:xx:xx:xx
Ethernet Data Packet Type	2	0x08, 0x00
Internet Protocol	20	Protocol parameters
UDP Port Number	4	Source port (default: 10000) Destination port (default: 2368)
UDP Length	2	Eight bytes more than point cloud UDP data (see Figure 22. Data structure).
UDP Checksum	2	Checksum of the Ethernet Header

3.1.2 Point cloud UDP data

Pre-Header

Field	Byte(s)	Description
Start of Packet	1	0xEE
Start of Packet	1	0xFF
Protocol Version Major	1	Main class of the point cloud UDP packet structure Current value: 0x07
Protocol Version Minor	1	Subclass of the point cloud UDP packet structure Current value: 0x03
Time Division Multiplexing Version	1	Current value: 0x01
Reserved	1	-

Frame (channel array) and data packets (subzones)

Central-enhanced ranging

The lidar has a 192 × 224 channel array. A complete scan of the entire FOV (i.e., all channels fire once) produces one point cloud frame.

The channel array is divided into 32 × 14 subzones. Each subzone contains 6 × 16 channels.

When all channels in a subzone fire once, the measurements are contained in one Point Cloud Data Packet.

Therefore, in single return mode, each frame corresponds to 32 × 14 = 448 Point Cloud Data Packets.

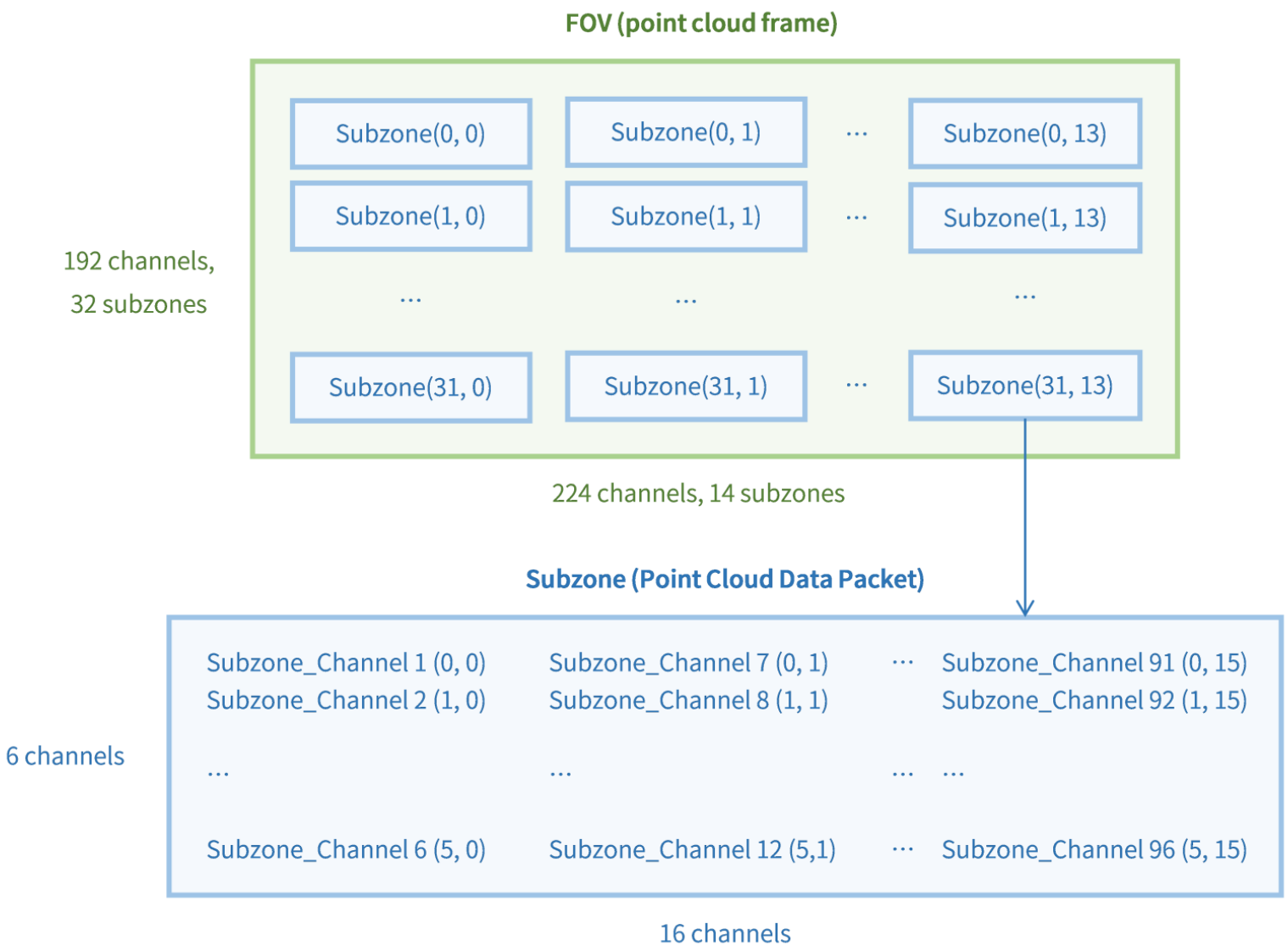
FOV (point cloud frame)
192 channels,
32 subzones
Subzone(0, 0)
Subzone(0, 1)
Subzone(0, 13)
Subzone(1, 0)
Subzone(1, 1)
Subzone(1, 13)
Subzone(31, 0)
Subzone(31, 1)
Subzone(31, 13)
224 channels, 14 subzones
Subzone (Point Cloud Data Packet)
6 channels
Subzone_Channel 1 (0, 0)
Subzone_Channel 7 (0, 1)
Subzone_Channel 91 (0, 15)
Subzone_Channel 2 (1, 0)
Subzone_Channel 8 (1, 1)
Subzone_Channel 92 (1, 15)
Subzone_Channel 6 (5, 0)
Subzone_Channel 12 (5,1)
Subzone_Channel 96 (5, 15)
16 channels

Uniform-emission ranging

The lidar has a 192 × 256 channel array. A complete scan of the entire FOV (i.e., all channels fire once) produces one point cloud frame.

The channel array is divided into 32 × 16 subzones. Each subzone contains 6 × 16 channels.

When all channels in a subzone fire once, the measurements are contained in one Point Cloud Data Packet.

Therefore, in single return mode, each frame corresponds to 32 × 16 = 512 Point Cloud Data Packets.

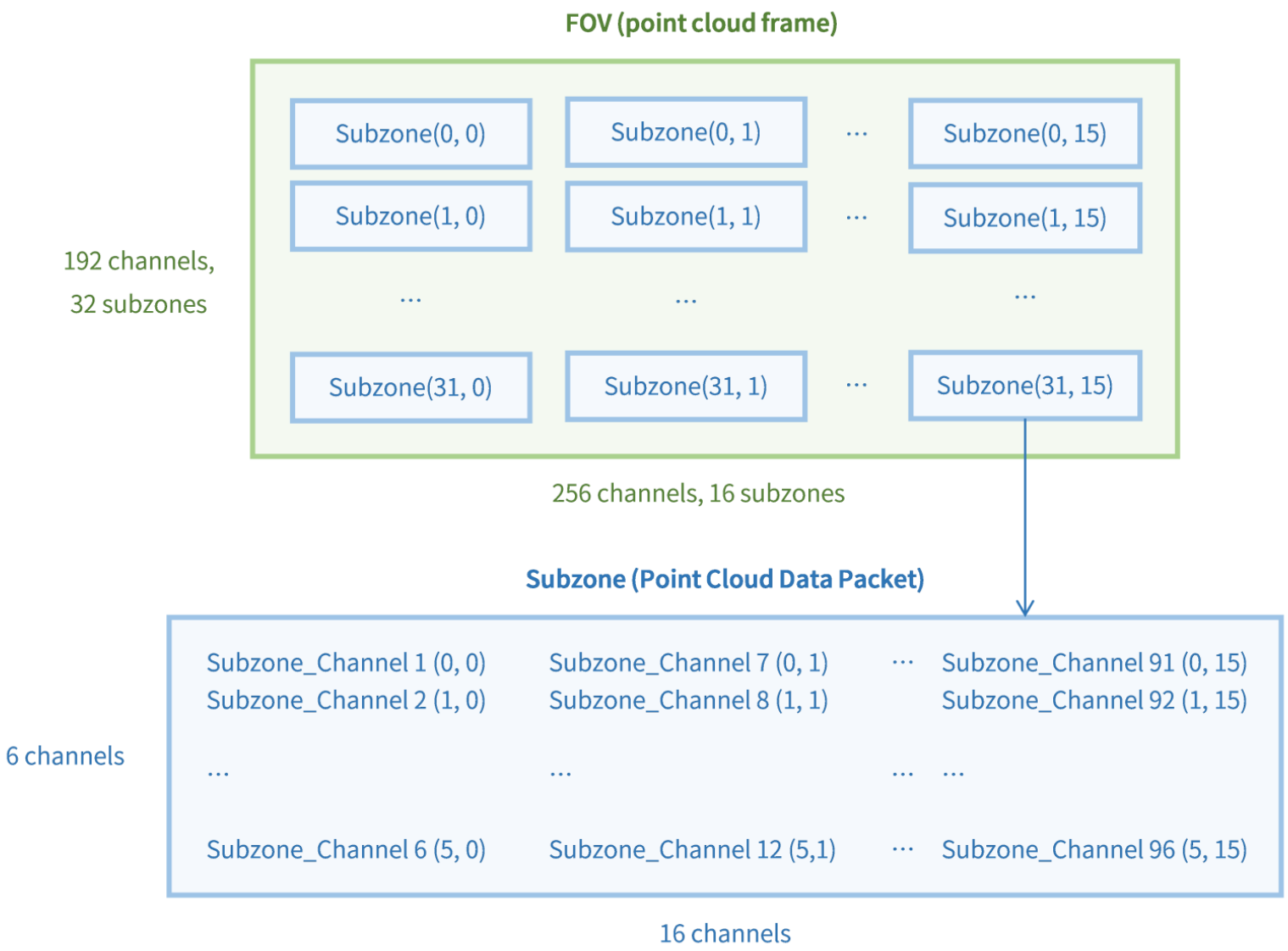
FOV (point cloud frame)
192 channels,
32 subzones
Subzone(0, 0)
Subzone(0, 1)
Subzone(0, 15)
Subzone(1, 0)
Subzone(1, 1)
Subzone(1, 15)
Subzone(31, 0)
Subzone(31, 1)
Subzone(31, 15)
256 channels, 16 subzones
Subzone (Point Cloud Data Packet)
6 channels
Subzone_Channel 1 (0, 0)
Subzone_Channel 7 (0, 1)
Subzone_Channel 91 (0, 15)
Subzone_Channel 2 (1, 0)
Subzone_Channel 8 (1, 1)
Subzone_Channel 92 (1, 15)
Subzone_Channel 6 (5, 0)
Subzone_Channel 12 (5,1)
Subzone_Channel 96 (5, 15)
16 channels

Header

Field	Byte(s)	Description
Total Column Number	2	Number of column channels in each frame of Point Cloud Data • Central-enhanced ranging: 0x00 E0（224） • Uniform-emission ranging: 0x01 00（256）
Total Row Number	2	Number of row channels in each frame of Point Cloud Data Fixed: 0xC0 (192)
Reserved	2	-
First Block Return	1	Indicating the return in the first block of this packet. 0x00 — Single Return mode
Dis Unit	1	Unit of the `Distance` field in Section 3.1.2.4 Body. Default: 0x04 (4 mm)
Reserved	1	-
Packet Channel Number	2	Number of channels in each packet Fixed: 0x60 (96)
Reserved	8	-

Body

Field	Byte(s)	Description
Subzone_Channel 1	5	Measurements of Row 0, Column 0 in the subzone
Subzone_Channel 2	5	Measurements of Row 1, Column 0 in the subzone
…	…	…
Subzone_Channel 6	5	Measurements of Row 5, Column 0 in the subzone
Subzone_Channel 7	5	Measurements of Row 0, Column 1 in the subzone
Subzone_Channel 8	5	Measurements of Row 1, Column 1 in the subzone
…	…	…
Subzone_Channel 12	5	Measurements of Row 5, Column 1 in the subzone
…	…	…
Subzone_Channel 96	5	Measurements of Row 5, Column 15 in the subzone

Each channel in the Body

Field	Byte(s)	Description
Channel X	5	<table><tr><th>Field</th><th>Byte(s)</th><th>Description</th></tr><tr><td>Distance</td><td>2</td><td>Object distance = `Distance` × `Dis Unit` `Dis Unit` is specified in Section 3.1.2.3 Header.</td></tr><tr><td>Reflectivity</td><td>1</td><td>Reflectivity = `Reflectivity` Field × 1% Range: 0 to 255</td></tr><tr><td>Reserved</td><td>2</td><td>-</td></tr></table>

Tail

Field	Byte(s)	Description
Reserved	7	-
Packet Column ID	1	Column number of this packet's corresponding subzone Range: • Central-enhanced ranging：0 to 13 • Uniform-emission ranging: 0 to 15
Packet Row ID	1	Row number of this packet's corresponding subzone Range: 0 to 31
Frame ID	1	Cycle counter of frames Range: 0 to 255 (increments by 1 at the end of each frame) Frame ID is reset to 0 at every start-up.
Operational Mode	1	Reserved
Return Mode	1	0x33 — First
Frame Period	2	Fixed: 100 Unit: ms 10 Hz
Date & Time	6	Whole second part of the Coordinated Universal Time (UTC) of this data packet Transmitted in big-endian format. Byte 0: Fixed: 0x00 Bytes 1 to 5: Number of seconds since the Unix epoch (1970–01–01 00:00:00 UTC)

Field	Byte(s)	Description
UTC Fractional Seconds	4	The microsecond part of the Coordinated Universal Time (UTC) of this data packet. Unit: µs Range: 0 to 999 999 µs The absolute time of a Point Cloud Data Packet is defined in Appendix B Absolute time of point cloud data.
Factory Information	1	Fixed: 0x42
UDP Sequence	4	Sequence number of this data packet Range: 0 to 0xFF FF FF FF

Functional Safety and Cybersecurity

Field	Byte(s)	Description
Reserved	20	-

3.1.3 Ethernet tail

Field	Byte(s)	Description
FCS	4	Frame check sequence

4 Maintenance

The lidar's lenses are made of glass, similar to the material used for camera lenses and rear-view mirrors.

- Do NOT wipe the lenses when they are dry, nor use abrasive cleaners. Doing so can damage the optical coating.
- Do NOT apply excessive force to the lidar, as this can damage the lenses.
  - If a pressure washer is used to clean the lenses, make sure the distance between the nozzle and the lenses remains at least 60 cm.
  - Using automatic cleaning devices that are not specifically designed for lidars may pose risks. Please contact Hesai technical support for assessment.
  - Do NOT use sharp objects (such as knives or metal tweezers) or hard brushes (such as stiff nylon brushes or wire brushes) to scratch the lenses cover surface. Such actions may damage the lenses surface, and in severe cases, may cause malfunction.
- After prolonged exposure to strong sunlight and high temperatures, the lenses should NOT be cleaned immediately.
- If snow or ice accumulates on the lenses, do NOT use a pressure washer or an ice scraper.
  - A small broom is recommended to remove snow.
  - Do NOT use warm or hot water to remove snow or ice. Doing so can crack the lenses.
  - A solvent-free (i.e., free of organic solvents) ice removal spray is recommended to remove ice; alternatively, wait for the ice to melt by itself.
- Do NOT wax the lenses.

Please regularly check on the lenses, considering your use frequency, storage environment, and climate conditions.

- If foreign objects (such as dust, fingerprints, or oil stains) are found on the lenses, make sure to clean them.
- If corrosive foreign objects (such as insect remains, bird droppings, tree resin, road dust, industrial dust, asphalt, soot particles, and road salt) are found on the lenses, make sure to clean them immediately.

Cleaning procedure

1. Make sure the lidar is powered OFF.
2. Choose an appropriate cleaning agent:
   - For light stains, use room temperature water.
   - For stubborn stains, use a pH-neutral glass cleaner at room temperature.

3. Take a clean anti-static microfiber cloth, dampen it with the chosen cleaning agent, and gently wipe the dirty area on the lenses back and forth.
4. For stubborn stains, cover the dirty area with the dampened cloth to soften the stains before wiping.
5. Immediately after removing the stains, rinse the lenses with clean water. Then, use a clean microfiber cloth to gently wipe away any remaining liquid (which may contain residual cleaning agents or contaminants).

5 Troubleshooting

If the following procedures cannot solve your problem, please contact Hesai technical support.

Symptoms	Points to check
Indicator light is off on the connection box.	Make sure that the following conditions are met: • The power adapter is properly connected and in good condition. • The connection box is intact. • The input voltage and input current satisfy the requirements in Section 2.3 Connection box (optional). Afterward, power on the lidar again and check if the symptom persists.
Output data can be received by Wireshark but not by PandarView 2.	Make sure that the following conditions are met: • Lidar Destination Port is correctly set; this can be confirmed using LidarUtilities or PTC commands. • If VLAN is enabled, the computer's VLAN ID should be the same as the lidar's; this can be checked using LidarUtilities or PTC commands. • The computer's firewall for public networks is turned off, or PandarView 2 is added to firewall exceptions. • The latest PandarView 2 is installed (please contact Hesai technical support to obtain it). Afterward, power on the lidar again and check if the symptom persists.
The lidar cannot connect to LidarUtilities.	Make sure that the following conditions are met: • Ethernet cable is properly connected (by unplugging and plugging again). • The lidar's IP is in the same subnet with the computer's (WireShark may be used to check the lidar's IP that broadcasts data packets). • If VLAN is enabled, the computer's VLAN ID should be the same as the lidar's; this can be checked using LidarUtilities or PTC commands. Afterward, follow these steps: 1. Restart the computer or connect the lidar to another computer. 2. Power on the lidar again and check if the symptom persists.

Symptoms	Points to check
Point cloud is abnormal, showing obviously misaligned points, flashing points, or incomplete FOV.	Make sure that the following conditions are met: • The lidar's lenses are clean. If not, refer to Section 4 Maintenance for the cleaning method. • The lidar's angle correction file is applied (refer to PandarView 2 User Manual). • The lidar's internal temperature is between -40°C and 110°C; this can be confirmed using LidarUtilities, PandarView 2 or PTC commands. Afterward, check for packet loss. If no packet is lost yet the point cloud flashes, try these steps: 1. Update PandarView 2 to the latest version (please contact Hesai technical support to obtain it). 2. Restart the computer. If the point cloud is still abnormal, try these steps: 1. Connect the lidar to another computer and another network. 2. Power on again and check if the symptom persists.
The number of data packets received is abnormal, indicating missing packets.	Make sure that the following conditions are met: • The lidar's internal temperature is between -40°C and 110°C; this can be confirmed using LidarUtilities, PandarView 2 or PTC commands. • Ethernet is not overloaded. • No switch is connected to the network (the data transmitted from other devices may cause network congestion and packet loss). Afterward, follow these steps: 1. Connect the computer to no other devices but the lidar and check for packet loss. 2. Power on the lidar again and check if the symptom persists.

Appendix A: Performance distribution

Considering the characteristics of the lidar optical system and the performance requirements of different application scenarios, lidar's performance is distributed as follows.

A.1 Ranging capability

Measurement condition: 10% reflectivity, 100 klx ambient illuminance, 50% probability of detection (PoD)

Elevation (deg) \ Azimuth (deg)	-80		-60		-40		-20		0		20		40		60		80
	0	10	10	11	12	12	13	13	13	13	13	13	13	13	13	13	13
60	9	10	11	12	12	13	13	13	13	13	14	14	14	14	14	14	14
	9	10	11	12	13	13	13	13	14	14	14	14	14	14	14	14	14
	9	10	12	13	13	13	14	14	14	14	14	14	15	15	15	15	15
40	10	12	13	14	15	15	16	16	16	16	16	17	17	17	17	17	17
	11	12	14	15	15	16	16	16	16	16	17	17	17	17	17	17	17
	11	13	14	15	15	16	16	16	16	17	17	17	17	17	17	17	17
20	11	13	14	15	16	16	16	16	17	17	17	17	17	17	17	17	17
	12	14	16	17	18	18	18	19	19	19	19	19	19	19	19	19	19
	13	15	17	18	18	19	19	19	20	20	20	20	20	20	20	20	20
0	13	15	17	18	18	19	19	19	20	20	20	20	20	20	20	20	20
	12	14	16	17	18	18	18	19	19	19	19	19	19	19	19	19	19
	11	13	14	15	16	16	16	16	17	17	17	17	17	17	17	17	17
-20	11	13	14	15	15	16	16	16	16	17	17	17	17	17	17	17	17
	11	12	14	15	15	16	16	16	16	16	17	17	17	17	17	17	17
	11	12	14	15	15	15	16	16	16	16	16	17	17	17	17	17	17
-40	9	10	12	13	14	14	15	15	15	16	16	16	16	16	16	16	16
	9	10	11	12	13	13	13	13	14	14	14	14	14	14	14	14	14
-60	9	10	11	12	12	13	13	13	13	13	14	14	14	14	14	14	14
	0	10	10	11	12	12	13	13	13	13	13	13	13	13	13	13	13

Elevation (deg) \ Azimuth (deg)																	
	13	13	13	13	13	12	12	11	10	10	0
60	13	13	13	13	13	12	12	11	10	9
	13	13	13	13	12	11	10	9
	13	13	13	13	12	10	9
40	16	16	16	16	15	15	14	13	12	10
	16	16	16	16	16	15	15	14	12	11
	16	16	16	16	15	15	14	13	11
20	16	16	16	16	15	14	13	11
	19	19	19	18	18	18	17	16	14	12
	20	20	20	19	19	19	18	18	17	15	13
0	20	20	20	19	19	19	18	18	17	15	13
	19	19	19	18	18	18	17	16	14	12
	16	16	16	16	15	14	13	11
-20	16	16	16	16	15	15	14	13	11
	16	16	16	16	16	15	15	14	12	11
	16	16	16	16	16	15	15	15	14	12	11
-40	16	16	16	16	15	15	14	14	13	12	10	9
	14	14	14	13	13	13	13	12	11	10	9
-60	14	14	14	13	13	13	13	12	12	11	10	9
	13	13	13	13	13	12	12	11	10	10	0

Figure 23. Central-enhanced distribution of ranging capability (unit: m)

Figure 24. Uniform-emission distribution of ranging capability (unit: m)

A.2 Resolution

Elevation (deg) \ Azimuth (deg)	-80	-60	-40	-20	0	20	40	60	80
	0.00 1.34 1.30 1.28 1.27 1.26 1.26 1.26 1.27 1.26 1.26 1.25 1.25 1.26 1.26 1.26 1.26 1.25 1.25 1.26 1.26 1.27 1.26 1.26 1.26 1.27 1.28 1.30 1.34 0.00								
60	0.00 1.28 1.22 1.17 1.14 1.12 1.10 1.09 1.07 1.07 1.06 1.05 1.05 1.05 1.05 1.05 1.05 1.05 1.05 1.06 1.07 1.07 1.09 1.10 1.12 1.14 1.17 1.22 1.28 0.00								
	0.00 1.23 1.14 1.08 1.04 1.01 0.98 0.96 0.95 0.94 0.93 0.92 0.92 0.92 0.92 0.92 0.92 0.92 0.92 0.93 0.94 0.95 0.96 0.98 1.01 1.04 1.08 1.14 1.23 0.00								
	1.37 1.19 1.08 1.01 0.96 0.93 0.90 0.88 0.86 0.85 0.84 0.83 0.82 0.82 0.82 0.82 0.82 0.82 0.83 0.84 0.85 0.86 0.88 0.90 0.93 0.96 1.01 1.08 1.19 1.37								
40	0.00 1.16 1.04 0.96 0.91 0.87 0.84 0.82 0.80 0.78 0.77 0.76 0.76 0.75 0.75 0.75 0.75 0.76 0.76 0.77 0.78 0.80 0.82 0.84 0.87 0.91 0.96 1.04 1.16 0.00								
	0.00 1.13 1.00 0.92 0.87 0.82 0.80 0.77 0.75 0.74 0.72 0.71 0.71 0.70 0.70 0.70 0.70 0.71 0.71 0.72 0.74 0.75 0.77 0.80 0.82 0.87 0.92 1.00 1.13 0.00								
	0.00 1.11 0.98 0.89 0.84 0.79 0.76 0.74 0.72 0.70 0.69 0.68 0.67 0.67 0.66 0.66 0.67 0.67 0.68 0.69 0.70 0.72 0.74 0.76 0.79 0.84 0.89 0.98 1.11 0.00								
20	0.00 1.10 0.96 0.87 0.81 0.77 0.74 0.71 0.69 0.68 0.66 0.65 0.65 0.64 0.64 0.64 0.64 0.65 0.65 0.66 0.68 0.69 0.71 0.74 0.77 0.81 0.87 0.96 1.10 0.00								
	0.00 1.09 0.95 0.86 0.80 0.76 0.72 0.70 0.68 0.66 0.65 0.64 0.63 0.62 0.62 0.62 0.62 0.63 0.64 0.65 0.66 0.68 0.70 0.72 0.76 0.80 0.86 0.95 1.09 0.00								
	0.00 1.09 0.94 0.85 0.79 0.75 0.72 0.69 0.67 0.65 0.64 0.63 0.62 0.62 0.61 0.61 0.62 0.62 0.63 0.64 0.65 0.67 0.69 0.72 0.75 0.79 0.85 0.94 1.09 0.00								
0	0.00 1.09 0.94 0.85 0.79 0.75 0.72 0.69 0.67 0.65 0.64 0.63 0.62 0.62 0.61 0.61 0.62 0.62 0.63 0.64 0.65 0.67 0.69 0.72 0.75 0.79 0.85 0.94 1.09 0.00								
	0.00 1.09 0.95 0.86 0.80 0.76 0.72 0.70 0.68 0.66 0.65 0.64 0.63 0.62 0.62 0.62 0.62 0.63 0.64 0.65 0.66 0.68 0.70 0.72 0.76 0.80 0.86 0.95 1.09 0.00								
	0.00 1.10 0.96 0.87 0.81 0.77 0.74 0.71 0.69 0.68 0.66 0.65 0.65 0.64 0.64 0.64 0.64 0.65 0.65 0.66 0.68 0.69 0.71 0.74 0.77 0.81 0.87 0.96 1.10 0.00								
-20	0.00 1.11 0.98 0.89 0.84 0.79 0.76 0.74 0.72 0.70 0.69 0.68 0.67 0.67 0.66 0.66 0.67 0.67 0.68 0.69 0.70 0.72 0.74 0.76 0.79 0.84 0.89 0.98 1.11 0.00								
	0.00 1.13 1.00 0.92 0.87 0.82 0.80 0.77 0.75 0.74 0.72 0.71 0.71 0.70 0.70 0.70 0.70 0.71 0.71 0.72 0.74 0.75 0.77 0.80 0.82 0.87 0.92 1.00 1.13 0.00								
	0.00 1.16 1.04 0.96 0.91 0.87 0.84 0.82 0.80 0.78 0.77 0.76 0.76 0.75 0.75 0.75 0.75 0.76 0.76 0.77 0.78 0.80 0.82 0.84 0.87 0.91 0.96 1.04 1.16 0.00								
-40	1.37 1.19 1.08 1.01 0.96 0.93 0.90 0.88 0.86 0.85 0.84 0.83 0.82 0.82 0.82 0.82 0.82 0.82 0.83 0.84 0.85 0.86 0.88 0.90 0.93 0.96 1.01 1.08 1.19 1.37								
	0.00 1.23 1.14 1.08 1.04 1.01 0.98 0.96 0.95 0.94 0.93 0.92 0.92 0.92 0.92 0.92 0.92 0.92 0.92 0.93 0.94 0.95 0.96 0.98 1.01 1.04 1.08 1.14 1.23 0.00								
	0.00 1.28 1.22 1.17 1.14 1.12 1.10 1.09 1.07 1.07 1.06 1.05 1.05 1.05 1.05 1.05 1.05 1.05 1.05 1.06 1.07 1.07 1.09 1.10 1.12 1.14 1.17 1.22 1.28 0.00								
-60	0.00 1.34 1.30 1.28 1.27 1.26 1.26 1.26 1.27 1.26 1.26 1.25 1.25 1.26 1.26 1.26 1.26 1.25 1.25 1.26 1.26 1.27 1.26 1.26 1.26 1.27 1.28 1.30 1.34 0.00								

Figure 25. Distribution of resolution (unit: °)

Appendix B: Absolute time of point cloud data

B.1 Source of absolute time

The lidar retrieves the current absolute time by connecting to an external clock source.

B.1.1 PTP as the clock source

The lidar connects to a third-party PTP master to obtain PTP signal.

- PPS signal is not required nor used.
- PTP can be configured using LidarUtilities or PTC commands.
- The status of PTP signal can be found using LidarUtilities or PTC commands.

The absolute time is updated as follows:

PTP status	Date and time (accurate to the microsecond)	Lidar behavior
Free run	Virtual	Because the lidar has not been locked before, it starts counting from **a virtual UTC** (such as 1970–01–01 00:00:05) using the lidar's internal 1 Hz signal.
Tracking or Locked	Synchronized	The lidar extracts the actual date and time from the PTP master's messages.
Frozen	Drifting	When the lidar goes from Tracking/Locked to Frozen, it starts counting from **the last synchronized time** using the lidar's internal 1 Hz signal. This absolute time will gradually drift from the actual PTP time.

- PTP is a Plug & Play protocol; the lidar works as a PTP slave device and requires no additional setup.
- The `UTC Fractional Seconds` and `Date & Time` fields in Point Cloud Data Packets strictly follow the PTP master device. Certain PTP master devices may have a specified offset from the lidar's time output. Please verify the configuration and calibration of your PTP master device.

B.2 Absolute time of the Point Cloud Data Packets

The absolute time of a Point Cloud Data Packet is $t_0 = t_s + t_{frac}$, where:

- t_s is the whole second part (see the `Date & Time` field).
- t_{frac} is the microsecond or nanosecond part (see the `UTC Fractional Seconds` field).

The definition of the above fields is in Section 3.1.2.5 Tail.

Appendix C: Legal notice

Copyright © 2017-2026 Hesai Technology Co., Ltd.
All rights reserved. Use or reproduction of this manual in parts or its entirety in any form or by any means without the written authorization of Hesai is prohibited.

Hesai Technology makes no representations or warranties, either expressed or implied, with respect to the contents hereof and specifically disclaims any warranties, merchantability, or fitness for any particular purpose. Further, Hesai Technology reserves the right to revise this publication and to make changes from time to time in the contents hereof without obligation to notify any person of such revisions or changes.

HESAI and HESAI logo are registered trademarks of Hesai Technology. All other trademarks, service marks, and company names in this manual or on Hesai's official website are properties of their respective owners.

The software included in this product contains copyright that is registered under Hesai Technology. Any third party is not permitted, except as expressly permitted by the licensor or expressly required by applicable law, to decompile, reverse engineer, disassemble, modify, rent, lease, loan, distribute, sublicense, create derivative works based on the whole or any part of the software.

Hesai Product Warranty Service Manual is on the Warranty Policy page of Hesai's official website: https://www.hesaitech.com/warranty-policy/

Hesai Technology Co., Ltd.

Phone: +86 400 805 1233
Website: www.hesaitech.com
Address: Building A, Haisu Culture Plaza, Shanghai, China

Business Email: info@hesaitech.comService
Email: service@hesaitech.com